CF2 Series

乾式單板電磁離合器-法蘭固定型 Electromagnetic Power-Applied Friction Clutch - Flange Mounted

附軸承導座 with bearing mounted hub

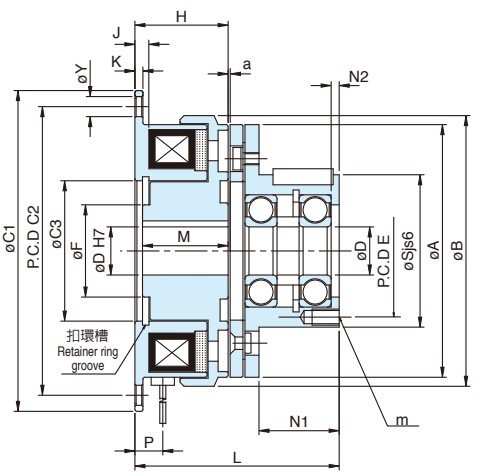

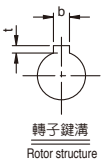

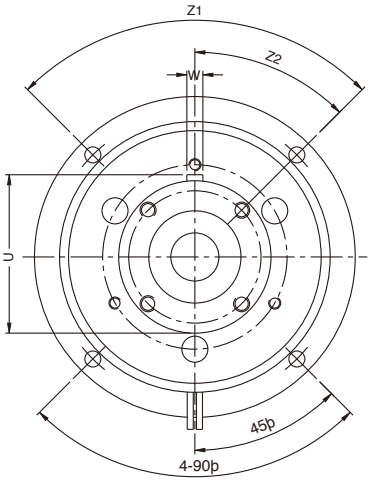

型 號 MODEL		CF20S6AA	CF21S5AA	CF22S5AA	CF2005AA	CF2010AA	CF2020AA	CF2040AA
靜摩擦轉距 Static Friction Torque	[kgm](Nm)	0.55 (5.5)	1.1 (11)	2.2 (22)	4.5 (45)	9 (90)	17.5 (175)	35 (350)
動摩擦轉距 Dynamic Friction Torque	[kgm](Nm)	0.5 (5.0)	1.0 (10)	2.0 (20)	4 (40)	8 (80)	16 (160)	32 (320)
功率 Power	[24V](W) at 20ºC	11	15	20	25	35	45	60
徑方向 Radius	A	63	80	100	125	160	200	250
	B	67.5	85	106	133	169	212.5	264
	C1	80	100	125	150	190	230	290
	C2	72	90	112	137	175	215	270
	C3	35	42	52	62	80	100	125
	D	12	15	20	25	30	40	50
	E	33	37	47	52	62	74.5	101.5
	F	23	28	40	45	62	77	100
	S	38	45	55	64	75	90	115
	U	39.5	47	57	67	78	93.5	118.5
	Y	5	6	7	7	9.5	9.5	11.5
軸方向 Shaft	H	24	26.5	30	33.5	37.5	44	51
	J	3.5	4.3	5	5.5	6	7	8
	K	2	2.5	3	3.5	4	5	6
	L	51.55	60.3	70.9	86.8	104	124.2	145.5
	M	22	24.1	27	30	34	39.15	47.15
	N1	20	25	30	40	50	60	70
	N2	2	2.5	3	2	3	5	6
	P	7.5	9.5	8.9	9.5	9.5	10.5	15.5
	W	4	5	5	7	7	10	12
	Z1	3-120º		4-90º		6-60º	4-90º	8-45º
	Z2	60º	60º	45º	45º	30º	45º	225º
	m	3-M4*0.7P*4L	3-M4*0.7P*6L	4-M4*0.7P*8L		6-M5*0.8P*8L	4-M6*1P*12L	8-M6*1P*12L
	a	0.2 (±0.05)			0.3 ($^{+0.05}_{-0.1}$)		0.5 ($^{-0}_{-0.2}$)	
	b	4	5	5	7	7	10	12
	t	1.8	2.3	2.3	3.3	3.3	3.8	3.8
重量 Weight	(kg)	0.66	1.19	2.11	3.8	6.9	13	23.6
保護素子 Protective device		07D470K	07D470K		10D680K	14D680K		20D680K